LINEA 2000
Audio entrance panel

342911 - 342921

Description

2 WIRE system audio pushbutton panel.
Wall mounted. Green LED backlit name plate.
One and two-family version available.

Technical data

Power supply from SCS BUS:	18 - 27 Vdc
Stand by absorption:	30 mA
Max. operating absorption:	65 mA
Operating temperature:	(-25) - (+70)°C

Dimensional data

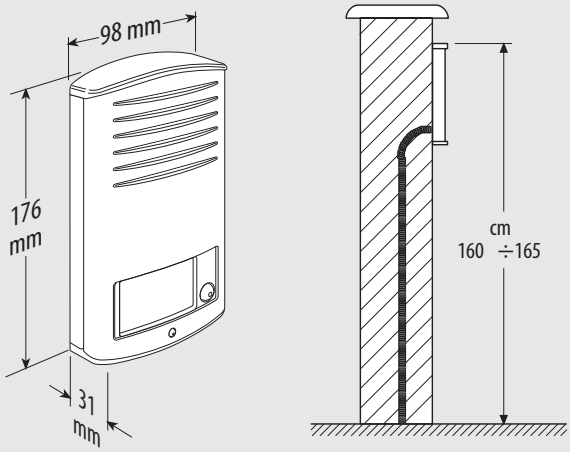

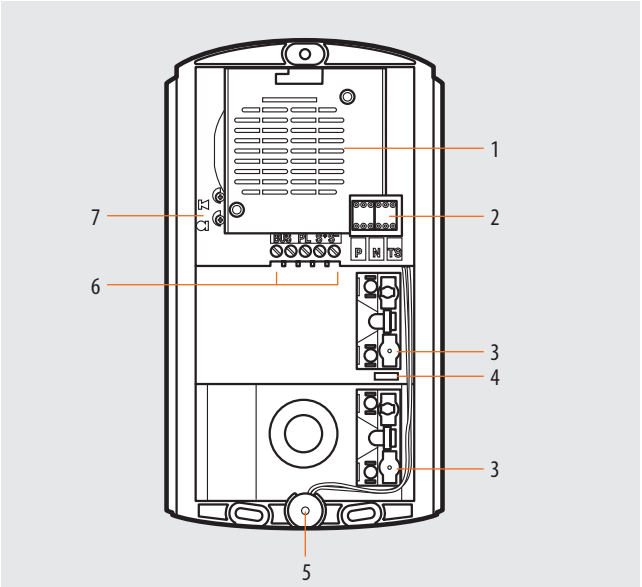

Legend

1. Loudspeaker
2. Configurator housing
3. Call keys
4. JUMPER for exclusion of the call tone on the entrance panel (can be enabled removing the jumper)
5. Microphone
6. Terminals for BUS and door lock connection: the module allows to control an electric door lock directly connected to the S+ S- terminals (18 V 4 A impulsive - 250 mA holding current 30 Ohm max)
7. Microphone and loudspeaker volume adjustment

Configuration

The device must be configured (only phisically) as follows:

P - entrance panel number
The configurator in socket P of the speaker module assigns to this a recognition number inside the system.
The numbering of the entrance panels must always start from P=0. The entrance panel configured with P=0 must be a common (or main) entrance panel.

N - call number
Assigns the correspondence between the entrance panel pushbuttons and the audio handsets or video handsets.

T – Door lock control time delay

Configurator number							
0= No configurator	1	2	3	4 *	5	6	7
4 sec.	1 sec.	2 sec.	3 sec.	as pushbutt.	6 sec.	8 sec.	10 sec.

* **Operation as pushbutton for 10 sec. max.,** after which standby mode is activated. To extend operation time over 10 seconds, use actuator item 346200 configured with **MOD=5**.

S - type of call signal
The configuration of S determines the call tone of SPRINT handsets.
One can thus differentiate the calls from different entrance panels.

Table for SPRINT handset call signal

Configurator	0	1	2	3
Type of bell	2-tone	2-tone	2-tone	One-tone
	1200Hz	1200Hz	1200Hz	1200Hz
	600Hz	0 Hz	2400Hz	

For the SWING, PIVOT, POLYX and AXOLUTE handsets, the **S configurator** associates the entrance panel to the bell programmed in the same apartment. It is possible to chose between 16 different bells. In one-family systems, **S=9 configures the general call** and the handsets ring, the same as with the S=0.